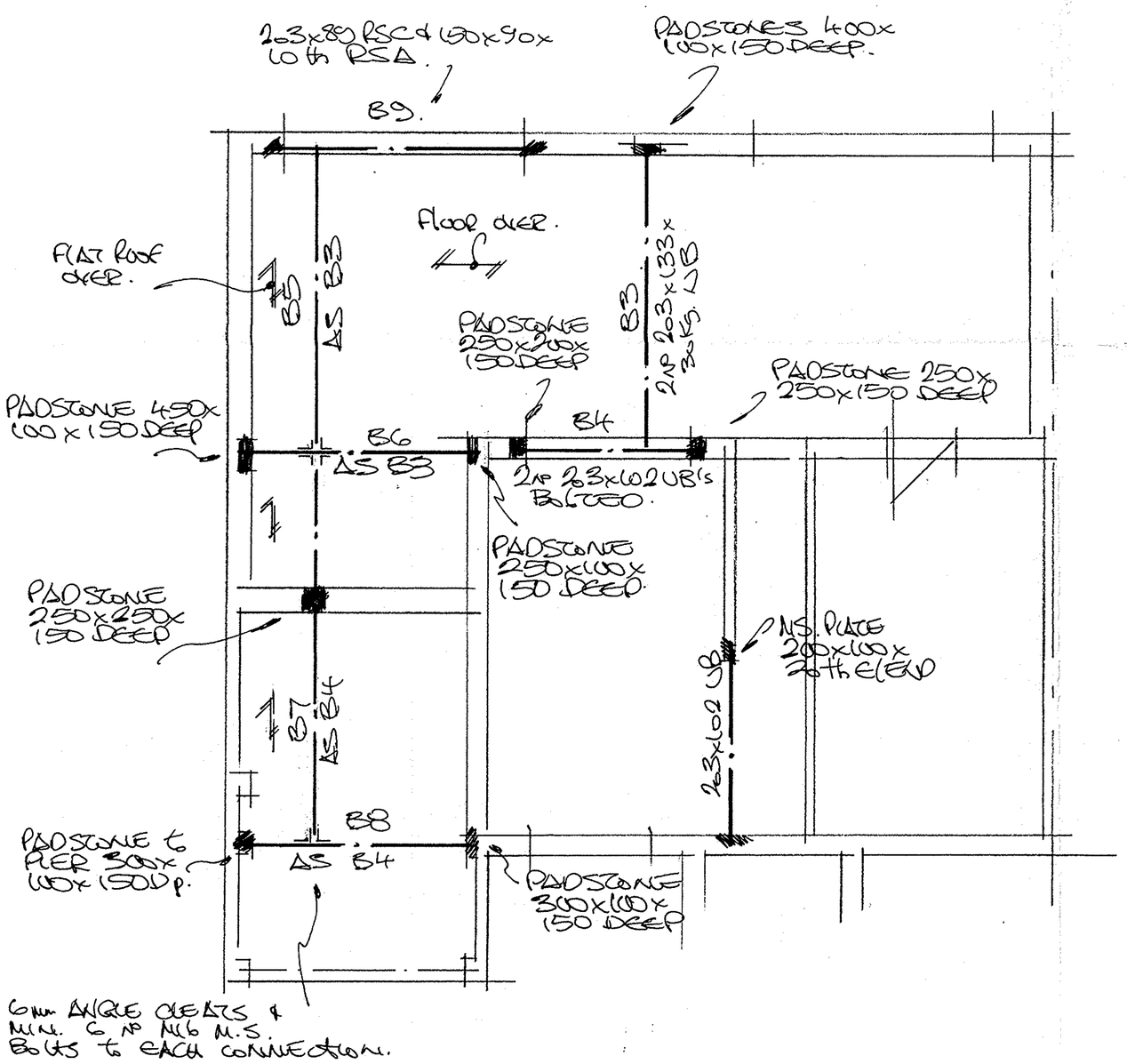

TD 106

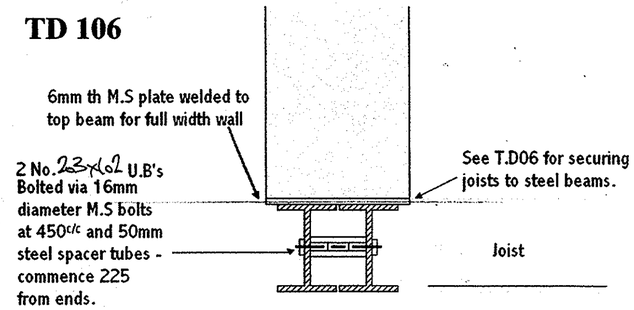

DETAIL B7
SIMILAR FOR B3, B5,

READ IN CONJUNCTION WITH DRG. 01 & ALL RELEVANT SPEC'S.

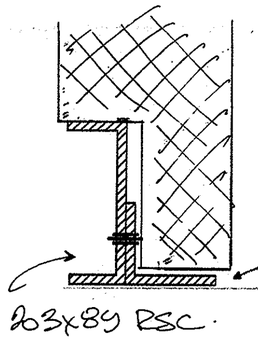

TD.104

150x90x10mm th RSA bolted to RSC for its full length via 16mm diameter M.S bolts 450c/c to commence 225 from ends.

DETAIL B9.

REV	DESCRIPTION	DATE

PROJECT.
SUPASTRUCTURE DETAILS.

DRG. No. 02	REV
1:50	AUG 06.

Colin Millard
Unit 5 Barleylands Craft Centre,
Barleylands Road, Billericay,
Essex. CM11 2UD
01268 274114